Roland "Sustain"

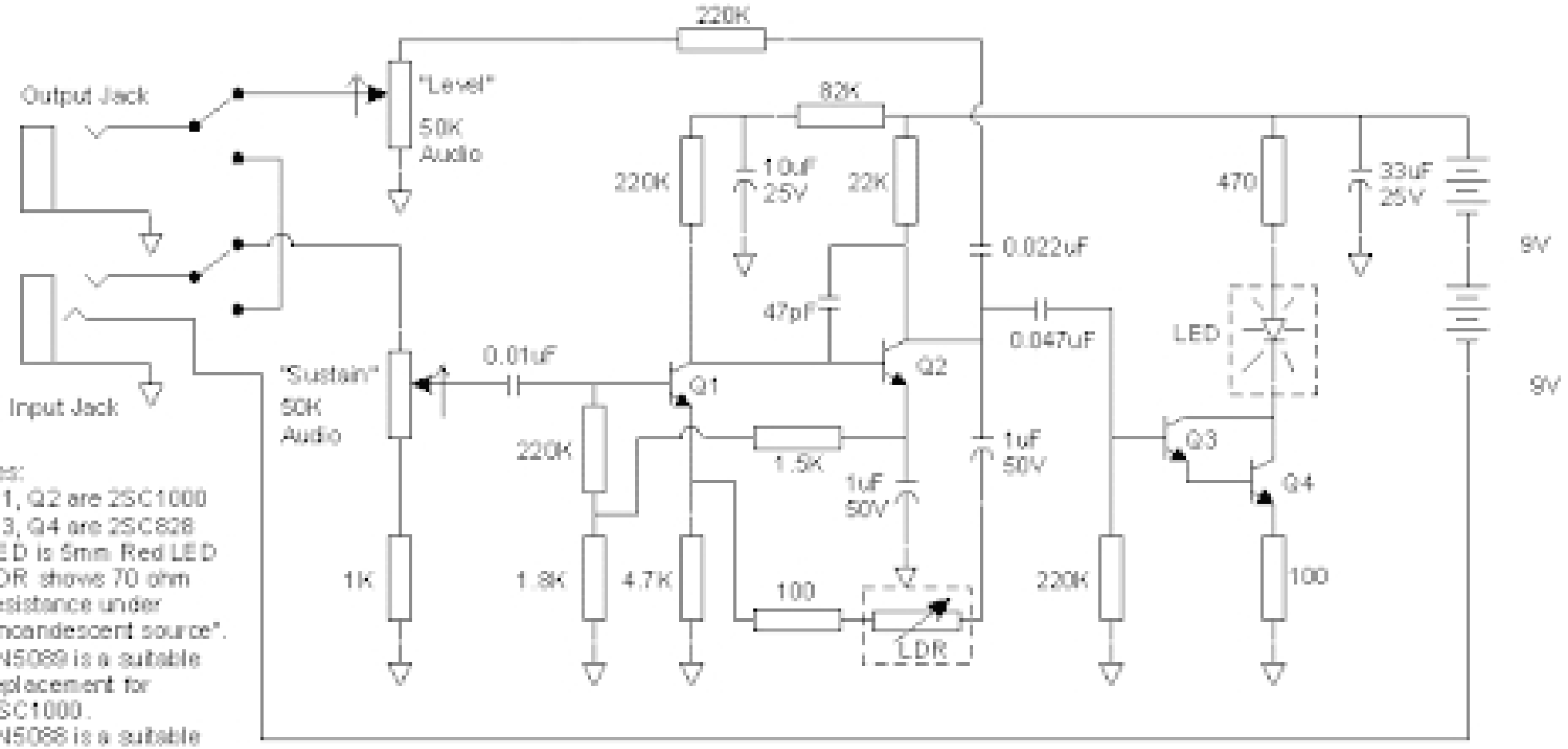

Notes:
1. Q1, Q2 are 2SC1000
2. Q3, Q4 are 2SC828
3. LED is 5mm Red LED
4. LDR shows 70 ohm resistance under "incandescent source".
5. 2N5089 is a suitable replacement for 2SC1000.
6. 2N5088 is a suitable replacement for Q3
7. 2N3904 is a suitable replacement for Q4.
8. "2SC" and "2N" pinouts are different.

Drawing copyright 1999 R.G. Keen. All rights reserved. Fair use only with this notice.
No permission for local copies or reposting from sites other than http://www.eden.com/~keenr/.