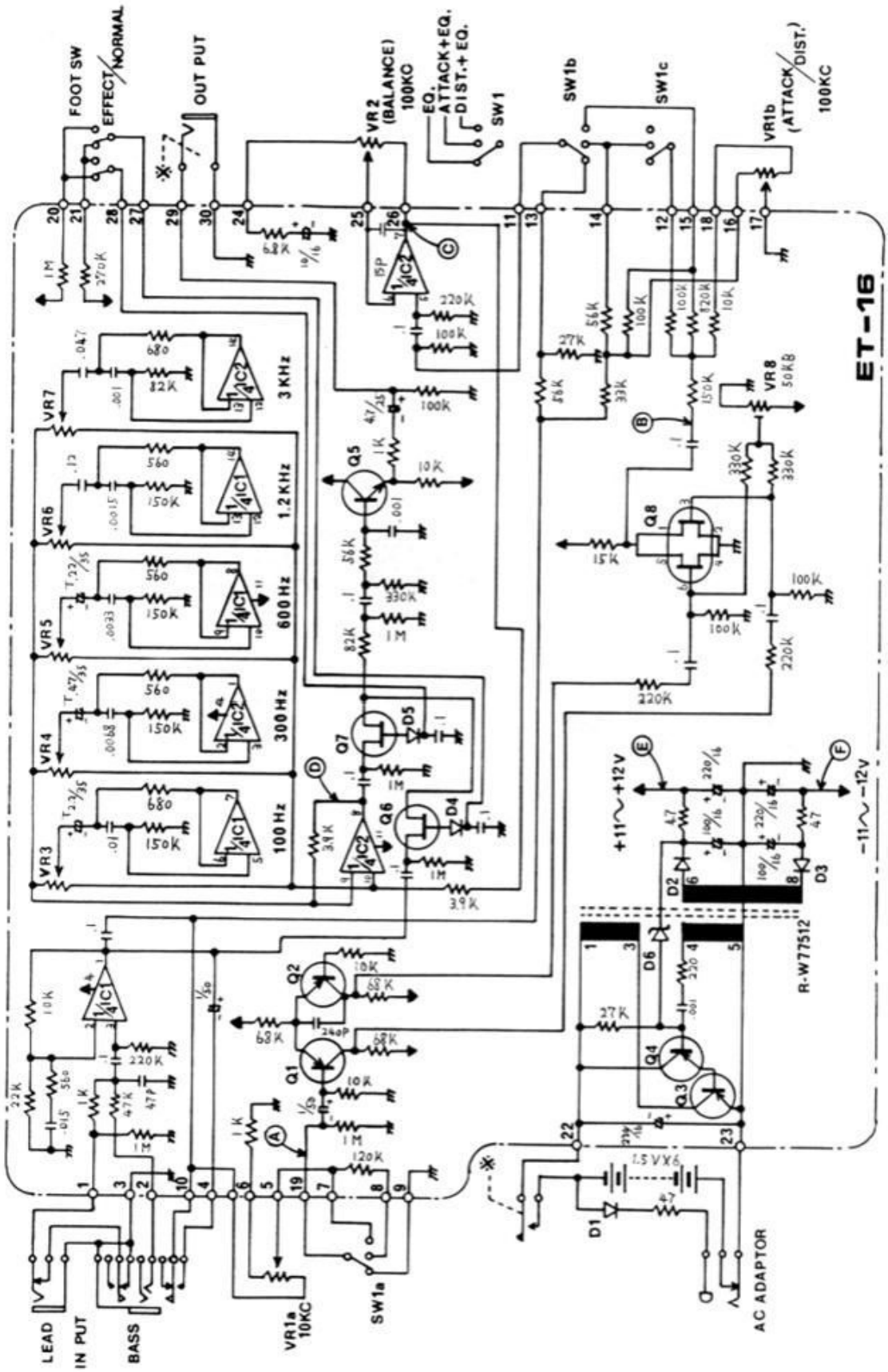
FOOT SW
EFFECT/NORMAL
OUT PUT
VR2 (BALANCE) 100KO
EQ.
ATTACK+EQ.
DIST.+EQ.
SW1
SW1b
SW1c
VR1b (ATTACK/DIST.) 100KC
ET-16
VR7
VR6
VR5
VR4
VR3
3 KHz
1.2 KHz
600 Hz
300 Hz
100 Hz
VR8 50KB
+11~+12V
-11~-12V
R-W77512
9X1.5V
AC ADAPTOR
LEAD
IN PUT
BASS
VR1a 10KC
SW1a